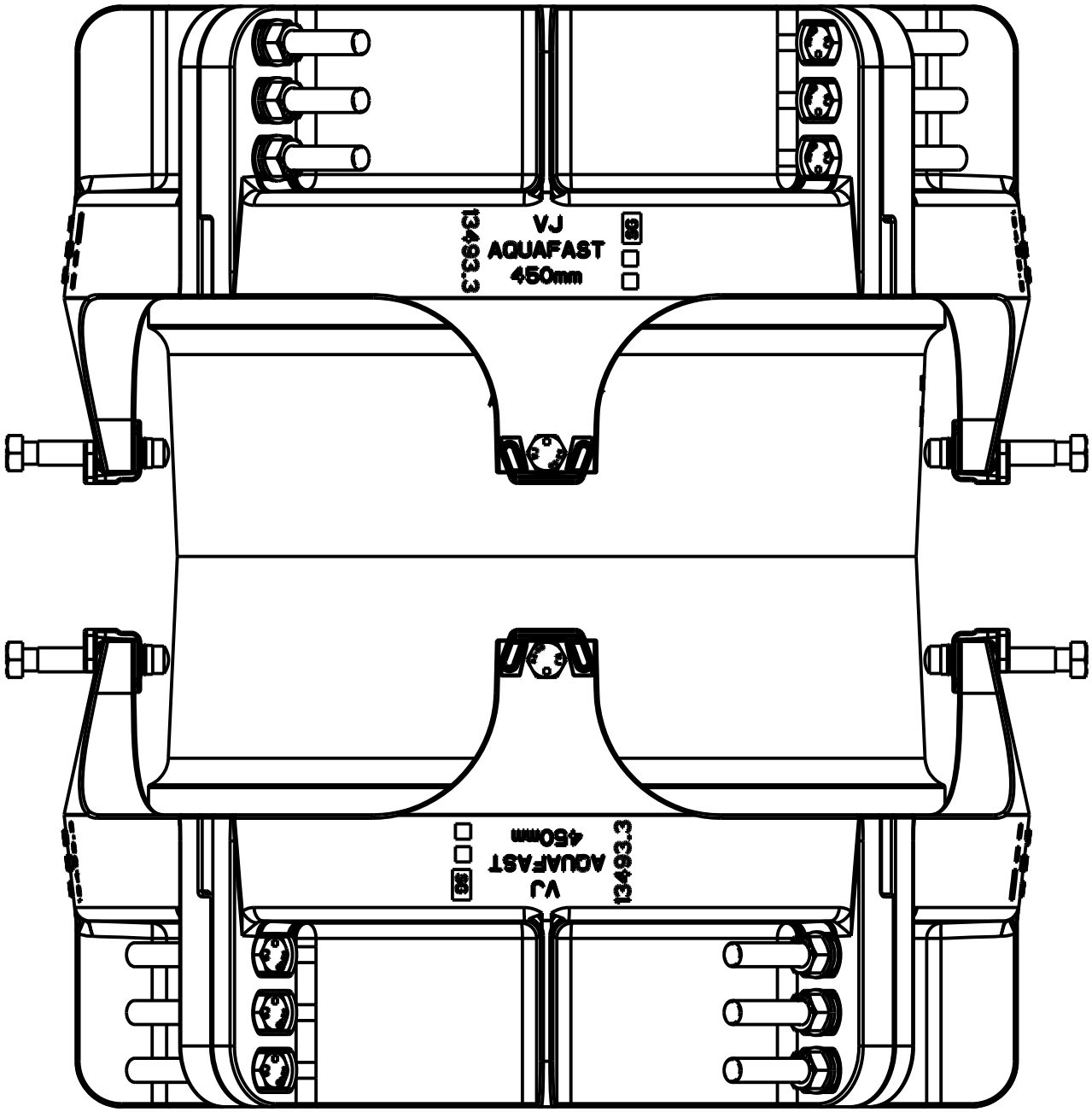
VJ
AQUAFAST
450mm
13493.3
VJ
AQUAFAST
450mm
13493.3