ALL PRODUCT DIMENSIONS ARE BEFORE COATING

## MATERIAL SPECIFICATION

**ADAPTOR BODY (Part 1)**
Ductile Iron to BS EN1563:2011
SYMBOL EN-GJS-450-10

**END RING (Part 2)**
Ductile Iron to BS EN1563:2011
SYMBOL EN-GJS-450-10

**GASKET (Part 3)**
EPDM to BS EN 681-1,TYPE WA,WC
NITRILE to BS EN 681-1,TYPE WA,WC,WG
or BS EN 682,TYPE G

**TEE BOLTS (Part 4)**
Steel to BS EN ISO 898-1:2009
PROPERTY CLASS 4.8

**NUTS (Part 5)**
Steel to
BS4190:2001 Grade 4

**WASHERS (Part 6)**
Stainless Steel to BS1449:PART 2:1983
GRADE 304S15

## OTHER COMPATIBLE FLANGE DRILLINGS

8" ANS1125; 8" ANS1150
(16bar max Working Pressure)

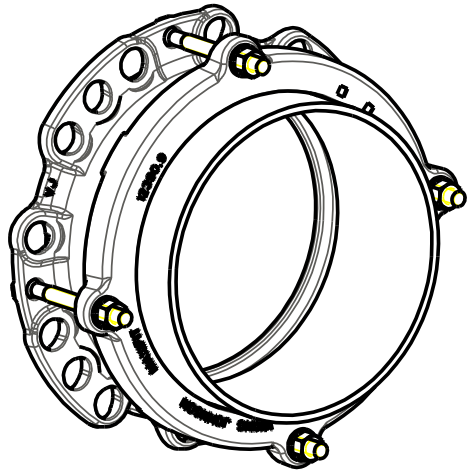

ISOMETRIC VIEW

REFERENCE DRAWING ONLY - NOT TO BE USED FOR INSPECTION PURPOSES. DO NOT SCALE

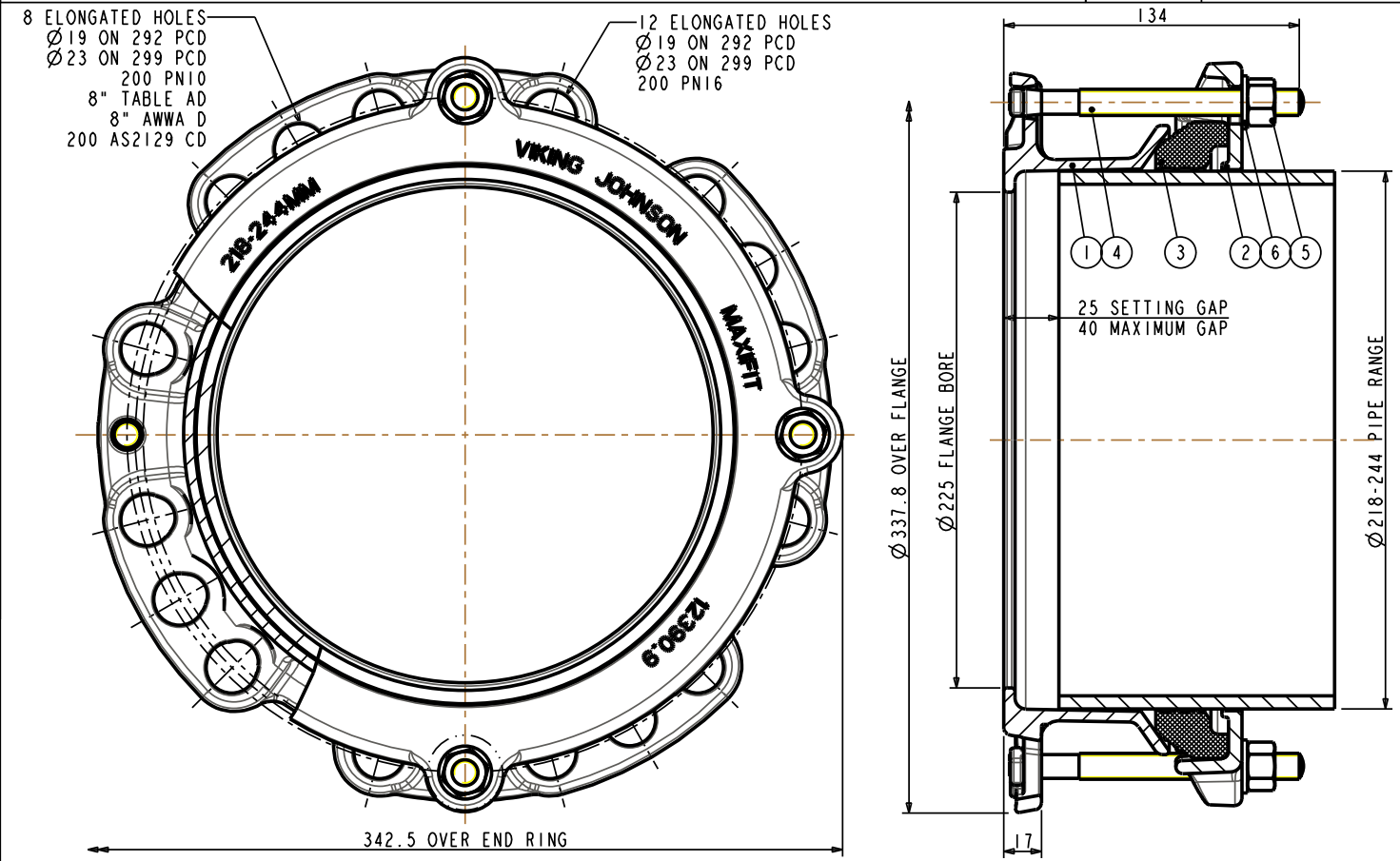


| PIPE RANGE | FLANGE DRILLINGS | GASKET MOULD | TEE-BOLTS | WORKING PRESSURE | TEST PRESSURE | WEIGHT KG | ASSEMBLY DRG NO |
|---|---|---|---|---|---|---|---|
| 218-244 | 200 PN10,16; 8" TABLE AD 8" AWWA D; 200 AS2129 CD | 12392_10 | 4-M12x125 | 16bar | 24bar | 8.3 | 12419_8 |

MAXIFIT FLANGE ADAPTORS DO NOT RESIST END LOAD - ADEQUATE RESTRAINT MUST BE PROVIDED

OVERALL DIMENSION DRAWING
FOR REFERENCE ONLY
VIKING JOHNSON RESERVE THE
RIGHT TO AMEND DETAILS WITHOUT
PRIOR NOTIFICATION

This drawing is the exclusive property of VIKING JOHNSON and is confidential and must not be reproduced or disclosed to a third party without written consent. It must be used only for the purpose which it has been issued and is returnable on request.

CRANE A Crane Co Company ©

# OVERALL DIMENSIONS OF MAXIFIT FLANGE ADAPTORS FOR 218-244mm PIPE RANGE WITH MULTI FLANGE DRILLING

RELEASE LEVEL: Manufacture | SHEET 1 OF 1

VIKING JOHNSON
World leaders in pipe joints and repair products

| DRAWN | P.N. | SCALE | N.T.S. |
|---|---|---|---|
| DATE | 07-Dec-05 | GENERIC | 12419_8 |

DRG NO 0_DIM_12419_8_1