ALL PRODUCT DIMENSIONS ARE BEFORE COATING

MATERIAL SPECIFICATION

FLANGE (Part 1)
STEEL to
BS EN10025-2:2004 GRADE S275JR
END RING (Part 2)
STEEL to
BS EN10025-2:2004 GRADE S275JR
CENTRE SLEEVE (Part 3)
STEEL to
BS EN10025-2:2004 GRADE S275JR
GASKET (Part 4)
RUBBER 80 HARDNESS
Grade to suit service
STUDS (Part 5)
STEEL to
BS EN ISO898-1:1999 PROPERTY CLASS 4.8
NUTS (Part 6)
STEEL to
BS4190:2001 GRADE 4
WASHERS (Part 7)
STAINLESS STEEL to
BS1449:PART 2:1983 GRADE 304S15

FINISH SPECIFICATION

NOTES

STUD TORQUES

PIPE MATERIAL	Nm	lbf ft
GRP	27-33	20-25
ALL OTHERS	54-65	40-50

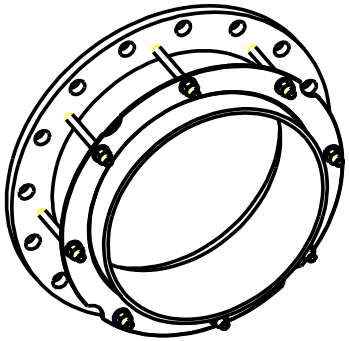

ISOMETRIC VIEW

REFERENCE DRAWING ONLY - NOT TO BE USED FOR INSPECTION PURPOSES

DO NOT SCALE

FOR HARNESSING ARRANGEMENT THIS PRODUCT WILL REQUIRE NOTCHING, AS SHOWN. UN-NOTCHED END RINGS WILL BE SUPPLIED UNLESS REQUESTED OTHERWISE

NOTCHING REQUIREMENTS FOR CAST AND DUCTILE IRON PIPE MATERIALS			NOTCHING REQUIREMENTS FOR ALL OTHER PIPE MATERIALS		
FLANGE HOLES	MINIMUM	CALCULATED MINIMUM	FLANGE HOLES	MINIMUM	CALCULATED MINIMUM
ALL FLANGE DRILLINGS	HALF THE NUMBER OF FLANGE HOLES	CALCULATED USING A YIELD OF 725N/mm²	FLANGES WITH 16 HOLES OR LESS	4	CALCULATED USING A YIELD OF 725N/mm²
			FLANGES WITH MORE THAN 16 HOLES	QUARTER THE NUMBER OF FLANGE HOLES	CALCULATED USING A YIELD OF 725N/mm²

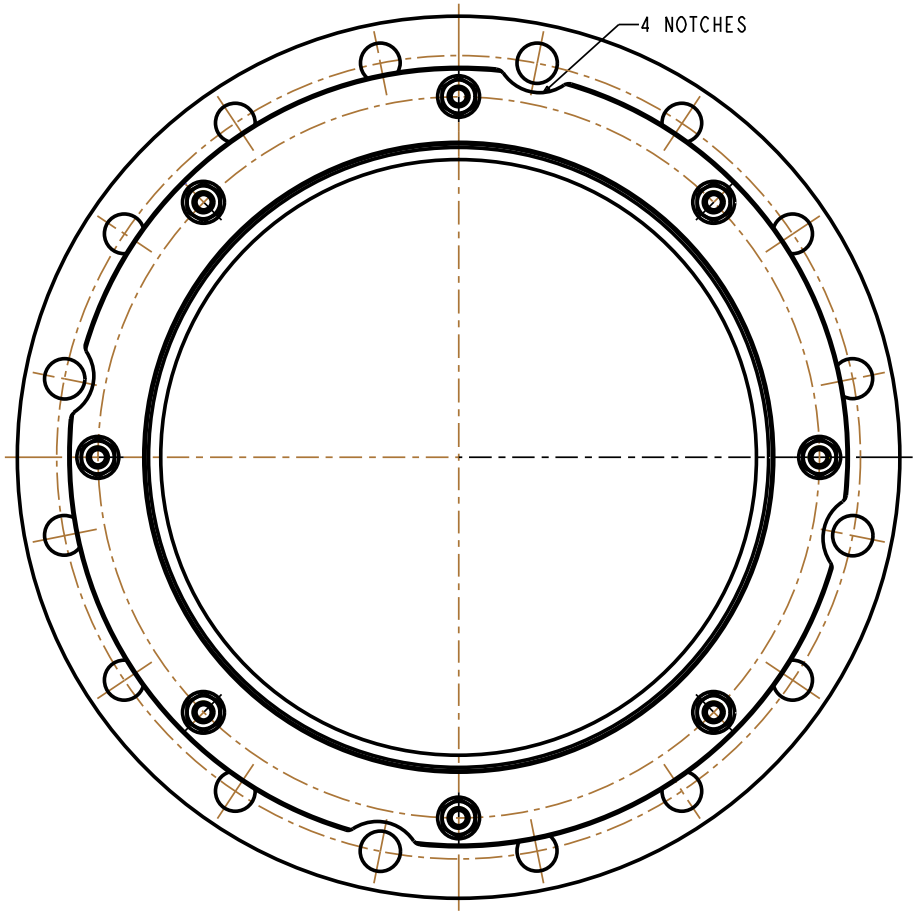

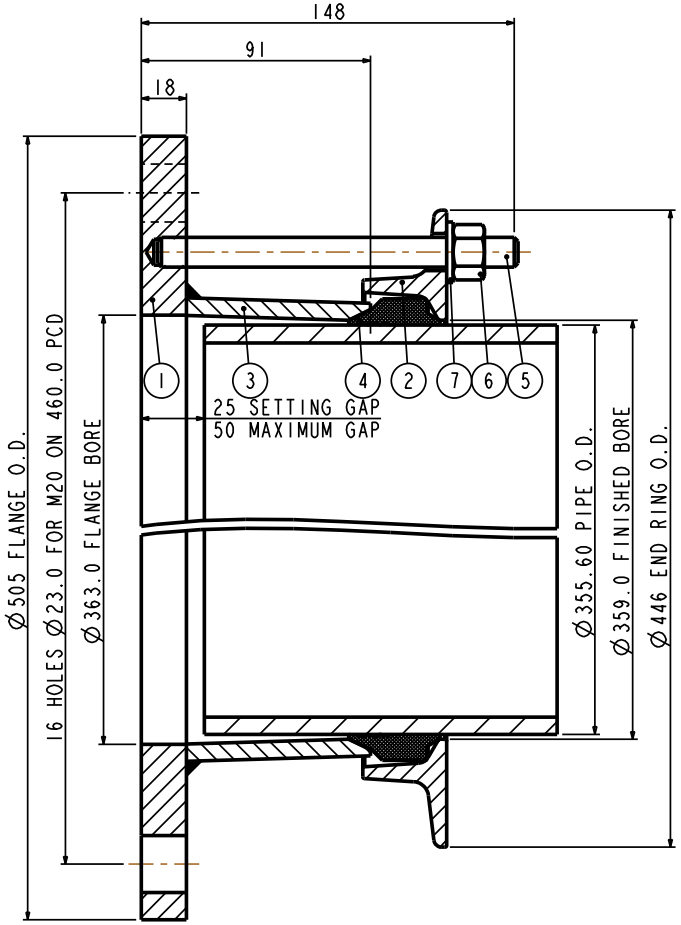

PIPE O.D.	PIPE MATERIAL	PIPE TOLERANCE +	PIPE TOLERANCE -	FLANGE DRILLING	STUDS NO-SIZE	GASKET MOULD	NO OF NOTCHES	WORKING PRESSURE	TEST PRESSURE	SECTION	WEIGHT KG	ASSEMBLY DRG NO
355.60	STEEL	1.60	1.60	350PN10	8-M12x140	J51LS	4	10.0bar	15.0bar	L02	22.8	7600_18

OVERALL DIMENSIONS DRAWING FOR REFERENCE ONLY
VIKING JOHNSON RESERVE THE RIGHT TO AMEND DETAILS WITHOUT PRIOR NOTIFICATION

This drawing is the exclusive property of VIKING JOHNSON and is confidential and must not be reproduced or disclosed to a third party without written consent. It must be used only for the purpose which it has been issued and is returnable on request.

CRANE A Crane Co Company

OVERALL DIMENSIONS OF VIKING JOHNSON FLANGE ADAPTOR L02 SECTION FOR 355.60mm PIPE O.D. WITH A 350PN10 FLANGE DRILLING

RELEASE LEVEL: Manufacture

SHEET 1 OF 1

VIKING JOHNSON
World leaders in pipe joints and repair products

DRAWN	AUTO	SCALE	0.143
DATE	15/10/08	GENERIC	7600_O_DIMS_1

DRG NO SKP779-1