ALL PRODUCT DIMENSIONS ARE BEFORE COATING

REFERENCE DRAWING ONLY - NOT TO BE USED FOR INSPECTION PURPOSES

DO NOT SCALE

MATERIAL SPECIFICATION

FLANGE (Part 1)
STEEL to
BS EN10025-2 GRADE S275JR

END RING (Part 2)
STEEL to
BS EN10025-2 GRADE S275JR

CENTRE SLEEVE (Part 3)
STEEL to
BS EN10025-2 GRADE S275JR

GASKET (Part 4)
RUBBER 80 HARDNESS
Grade to suit service

STUDS (Part 5)
STEEL to
BS EN ISO898-1 PROPERTY CLASS 4.8

NUTS (Part 6)
STEEL to
BS4190 GRADE 4

WASHERS (Part 7)
STAINLESS STEEL to
BS1449:PART 2 GRADE 304S15

FINISH SPECIFICATION

NOTES

STUD TORQUES

Torque to 55-65Nm or 40-50 lbf ft

FOR HARNESSING ARRANGEMENT THIS PRODUCT WILL REQUIRE NOTCHING, AS SHOWN. UN-NOTCHED END RINGS WILL BE SUPPLIED UNLESS REQUESTED OTHERWISE

NOTCHING REQUIREMENTS FOR CAST AND DUCTILE IRON PIPE MATERIALS			NOTCHING REQUIREMENTS FOR ALL OTHER PIPE MATERIALS		
FLANGE HOLES	MINIMUM	CALCULATED MINIMUM	FLANGE HOLES	MINIMUM	CALCULATED MINIMUM
ALL FLANGE DRILLINGS	HALF THE NUMBER OF FLANGE HOLES	CALCULATED USING A YIELD OF 725N/mm²	FLANGES WITH 16 HOLES OR LESS	4	CALCULATED USING A YIELD OF 725N/mm²
			FLANGES WITH MORE THAN 16 HOLES	QUARTER THE NUMBER OF FLANGE HOLES	CALCULATED USING A YIELD OF 725N/mm²

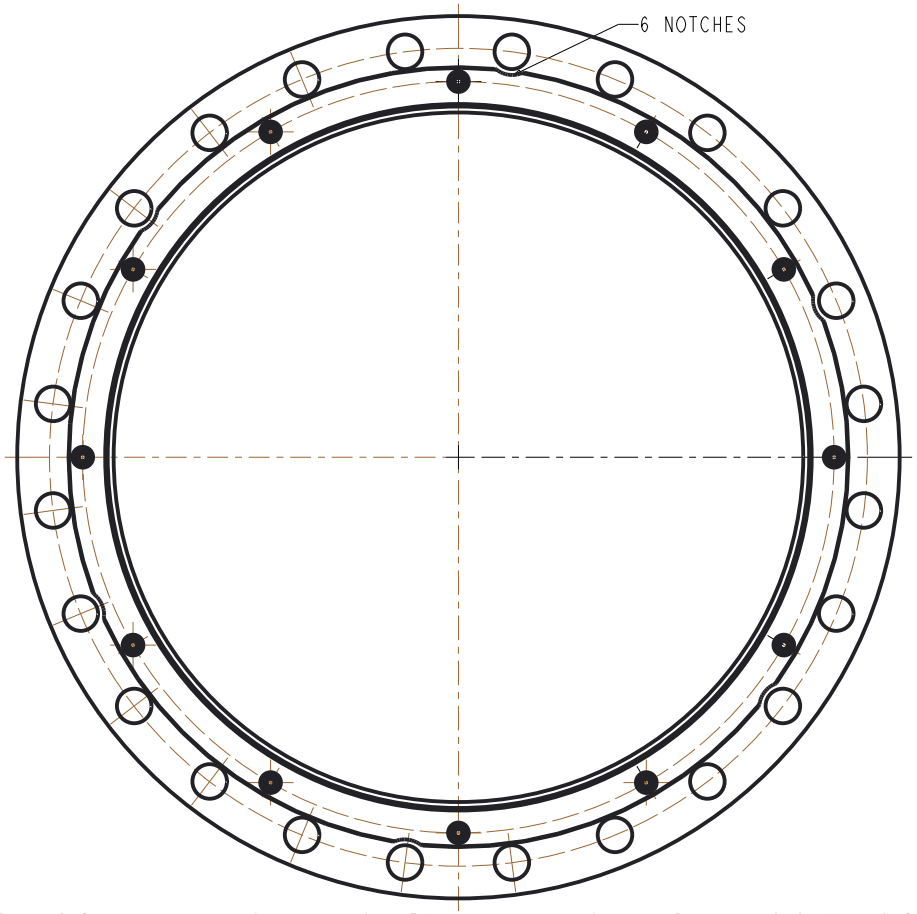

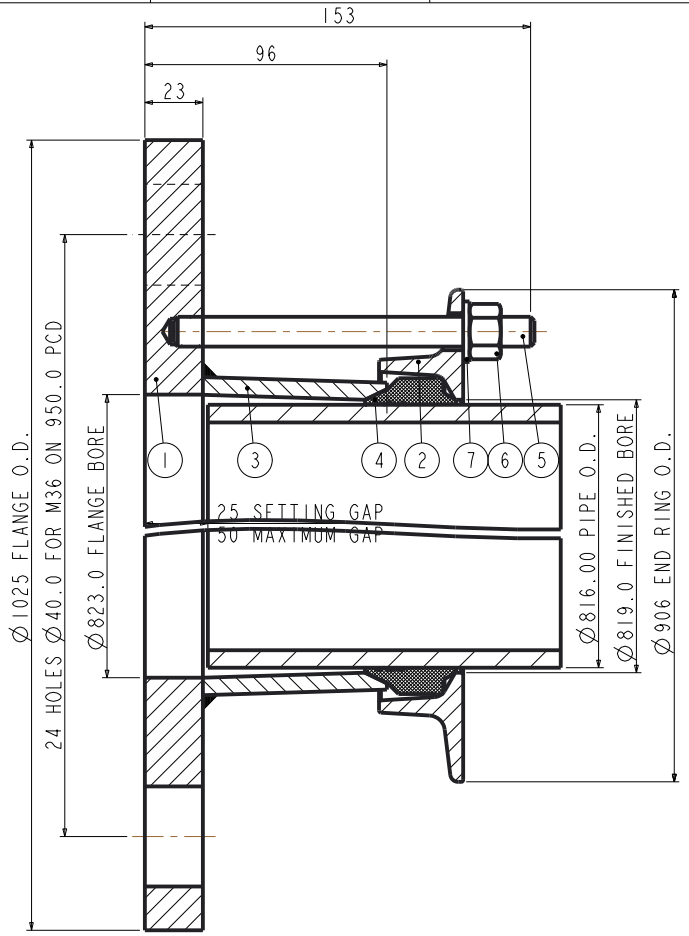

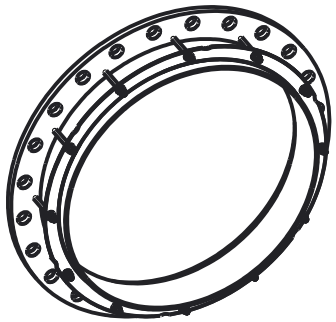

ISOMETRIC VIEW

Pipe O.D. includes a Coating of 1.50mm thick. Un-Coated Pipe is 813.00mm O.D.

PIPE O.D.	PIPE MATERIAL	PIPE TOLERANCE +	PIPE TOLERANCE -	FLANGE DRILLING	STUDS NO-SIZE	GASKET MOULD	NO OF NOTCHES	WORKING PRESSURE	TEST PRESSURE	SECTION	WEIGHT KG	ASSEMBLY DRG NO
816.00	STEEL	1.60	1.60	800PN16	12-M12x140	J65LS	6	16.0bar	24.0bar	LO2	68.9	7600_311

OVERALL DIMENSIONS DRAWING FOR REFERENCE ONLY
VIKING JOHNSON RESERVE THE RIGHT TO AMEND DETAILS WITHOUT PRIOR NOTIFICATION

This drawing is the exclusive property of VIKING JOHNSON and is confidential and must not be reproduced or disclosed to a third party without written consent. It must be used only for the purpose which it has been issued and is returnable on request.

CRANE A Crane Co Company ©

OVERALL DIMENSIONS OF VIKING JOHNSON FLANGE ADAPTOR LO2 SECTION FOR 816.00mm PIPE O.D. WITH A 800PN16 FLANGE DRILLING

RELEASE LEVEL: Released

SHEET 1 OF 1

VIKING JOHNSON
World leaders in pipe joints and repair products

DRAWN	AUTO	SCALE	0.143
DATE	14/02/18	GENERIC	7600_O_DIMS_1

DRG NO SKP1636-1